gnews update 37

customer newsletter, february 2023

PHARMAPACK By CPHI

Pharmapack
February 1–2, 2023
Paris, France | Hall 7.2, booth B60/B64

EZ-fillsmart™
Making your life easier

Agenda

Title story: EZ-fill Smart™ 02
Pharmaceutical services for primary packaging solutions 05
Customized solutions for drug delivery devices 09
Product news 12
Worthwhile reading 14
Sustainability 15
Events 15

gerresheimer
innovating for a better life

New EZ-fill Smart™ packaging platform with significant improvements

Gerresheimer is presenting the new and innovative ready-to-fill vial platform, EZ-fill Smart™, a solution designed to improve drug packaging quality, reduce Total Cost of Ownership (TCO), and shorten lead times for customers. The new EZ-fill Smart™ is an evolution of the standard EZ-fill platform, and it brings new advancements that drive appreciable improvements for customers amid growing demand for ready-to-fill vials.

The newly designed EZ-fill Smart™ packaging platform from Gerresheimer and Stevanato will share the same secondary packaging, production process and sterilization method, ensuring a consistent product availability and a risk-free, reliable supply chain.

De-risking of fill & finish

Risk-free processing and seamless integration into standard fill & finish lines from all major machine vendors

Lower particles – improved quality

>90% particle reduction* creating a new gold standard for the benefit of the patient

*Verified by internal testing and external certified laboratory

Supply chain security

Risk mitigation through like-for-like standard of two leading global manufacturers

The EZ-fill Smart™ platform leverages increased automation throughout the manufacturing flow to increase productivity and reduce human errors. The optimized platform features no glass-to-glass and no glass-to-metal contact which improves quality and integrity of the vials throughout the product life cycle. The redesigned secondary packaging has yielded a significant reduction of particle risks during customers' operations, delivering substantially improved quality.

The new EZ-fill Smart™ now offers the market an alternative sterilization method that is safe and more environmentally friendly compared to traditional Ethylene Oxide (EtO) sterilization. Intended to be perfectly suited for primary packaging solutions in use with highly sensitive drugs, it also incorporates guidelines given by regulatory bodies supporting the current direction to replace EtO sterilization.

EZ-fill Smart™ pursues combined sustainability approaches by increasing the packaging efficiency, the implementation of a new eco-friendly sterilization method, and the use of biopolymers and recycled plastic.

Developed in close cooperation with major machine vendors, EZ-fill Smart™ ensures a proven seamless integration with standard fill & finish operations. The platform also accommodates both small and large batch production. The implemented advancements guarantee the processability on filling lines with the primary aim to facilitate the complete automation of the in-feeding process.

Along with the nest & tub configuration, EZ-fill Smart™ will also be available in tray configuration to support and accelerate the conversion from bulk to Gx® RTF vials that is already underway in the market.

Reduced CO_2 footprint

Use of biopolymers and re-usable materials, weight reduction, Gx® RTF vials produced with green energy

Alternative sterilization

Safe and more environmentally friendly method for sterilization of complete system incorporating guidelines given by regulatory bodies

Reduced TCO

Reduced cost and investment driven by smaller machine footprint due to centralized processing of washing/depyrogenization

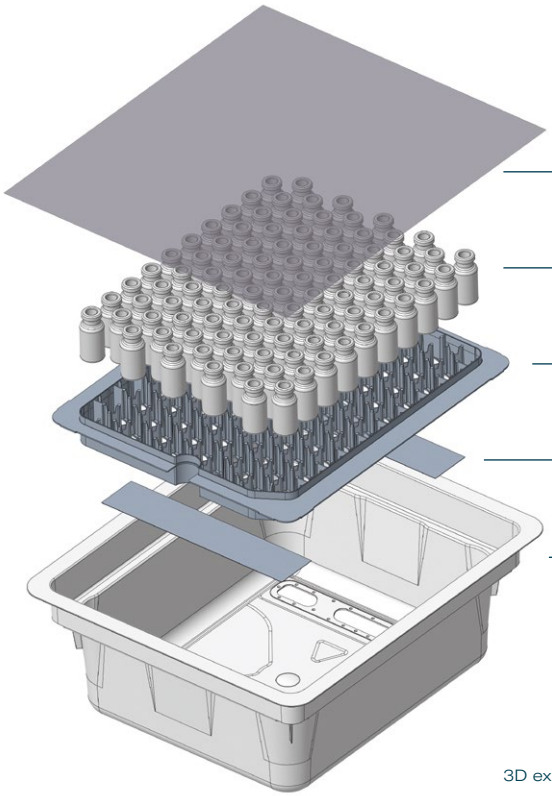

3D explosion for illustration purposes only; dimensions and details may vary

Component	Material	Properties / Feature
Transparent Polymer Film	Clear PET-PE	– Contributes to sterility assurance providing hermetic seal to package – Easy detachable by peeling mechanisms – Minimized particulate load while opening – Allows an unprecedented first view of the vials inside
Vial 2R to 20R	Glass Type I	– Primary container for all types of drugs – Other vial sizes on request – Clean & sterile – Ready-to-fill – Wide range of quality attributes according to chemical and pharmaceutical needs
Nest	Polypropylene	– Vial holding structure – Guarantees no glass to glass contact – Standardized design for existing fill & finish lines
Fixed Tyvek stripes	HDPE 1073B	– Permeable barrier for gas penetration, to allow sterilization by several methods – Provides hermetic sterility sealing, closure integrity – Position aligned with machine supplier to allow easy use with existing fill & finish and handling equipment – No removal needed
Tub	Polystyrene	– Primary product safe environment – 3 inch tub for all vial sizes and future cartridges including snap-fit closure solutions – Structure and density provider – Holds permeable Tyvek barrier for gas sterilization
Boxes	Polypropylene	– Safeguard packages for handling and transportation – Allow for terminal sterilization by EtO (ethylene oxide) or VHP (vaporized hydrogen peroxide)
Sterilization	EtO, VHP	– Terminal sterility of product to assure SAL – Proved sterility according ISO norms

*Tyvek is a registered trademark of the DuPont company.

Extractables & leachables lab testing for the pharmaceutical and biotech industries

Gerresheimer and Nelson Labs announce strategic alliance

To accelerate and de-risk drug development, Gerresheimer AG and Nelson Labs NV announce a formal strategic partnership on analytical and drug compatibility lab testing for the pharmaceutical and biotech industries.

Gerresheimer AG and Nelson Labs NV, a global leader in microbiological and analytical chemistry testing and advisory services for the medical device and pharmaceutical industries established a strategic partnership to support pharmaceutical and biotech companies in their development of primary packaging systems. The partnership between Gerresheimer's Gx® Biological Solutions and Nelson Labs leverages the expertise and competencies of two leaders in science and technology to significantly reduce risk and time to market for primary packaging solutions for injectables. Through this collaboration Nelson Labs will conduct extractables & leachables (E&L) testing, toxicological risk assessments, impurity identifications, and biocompatibility testing of injectable primary container closure systems or components.

Piet Christiaens
Scientific Director
Nelson Labs

"I am extremely pleased that Gerresheimer and Nelson Labs have taken this very important step forward in joining our forces to provide customers with stellar testing and expert advice in container/closure qualification. From the initial discussions of the partnership, it was clear that both companies share the same values when it comes to service-oriented customer support. This partnership is designed to help the pharmaceutical industry take full advantage of our scientific leadership, unique Compounds Screener Database, personalized support, and other resources that will be offered through this alliance. This strategic partnership will allow Nelson Labs to further expand our position in the vibrant and rapidly developing Asia Pacific Region."

Stefan Verheyden
Global VP
Gx® Biological Solutions

"Thanks to this partnership with Nelson Labs, and its proven track record in the fields of container closure integrity (CCI) and E&L, we at Gerresheimer have become one of the world's leading partners of the pharmaceutical and healthcare industries. Our broad portfolio includes many pharmaceutical packaging products and safe drug delivery systems such as insulin pens, inhalers, prefilled syringes, vials, cartridges, and bottles and containers for liquid and solid drugs with closure and safety systems. We have been serving the biologics market with our solutions for many years and have recently observed an increasing diversification of the market, its industry leaders, and their requirements. Therefore, we are extremely excited to enter this strategic partnership with Nelson Labs to further expand the support we offer biopharmaceutical companies."

Jean-Edouard Rabier
Director Business Development
Gx® Biological Solutions

"With this agreement, Gx® Biological Solutions will be able to offer an extended service package to our pharmaceutical and biotechnological customers for their new drug development and product life cycle management. We are now able to provide our customers the best selection of primary packaging systems (vials, syringes, and cartridges) made of glass or cyclic olefin polymer (COP) without any concerns about compatibility, stability, or safety of the drug product. Leading-edge scientific expertise, strong market recognition of Nelson Labs is definitely a must for Gx® Biological Solutions to reach our objectives to be a scientific destination and a provider of best-in class primary packaging systems, with an end-to-end support to our customers."

Transforming primary packaging into digital twins

Proof of Concept (PoC) successfully provides primary packaging with a unique ID to access its own trustworthy digital twin

Gerresheimer and Merck, Darmstadt, jointly developed a digital twin solution to further ensure traceability and trust in crucial steps along the pharmaceutical supply chain. The Proof of Concept aims to transform the pharma supply chain by creating digital twins for primary packaging. Through a single interconnected network, participants will benefit from full traceability and digital trust, resulting in cost savings, improved quality and even new business models, thanks to process automation.

Secure access to data

Faster processes and savings

Data-informed decision-making

New business models thanks to process automation

Fight counterfeiting thanks to transparency

"We are convinced that our primary packaging will become the key to enable supply networks across organizations and lead to faster process operations and data-informed decision making," said Daniel Diezi, Vice President Digitalization & New Business Models at Gerresheimer.

"At Merck, we develop innovative digital solutions to help companies exploit the exciting advantages of the Industrial Internet of Things (IIoT) and create digital twins they can really trust. We are proud to be a digital sparring partner to help Gerresheimer realize this by putting our patented digital technologies at their service," said Thomas Endress, Executive Director of EMD Digital at Merck.

Unique ID is the key to unlocking data

With the jointly developed solution, our physical primary packaging is provided with a trusted "key", enabling access to its digital twin. Primary packaging, such as syringes or vials, "travel" through the whole supply chain, from production to the point of care, connecting and collecting information that will be linked to their unique ID. They become the key to unlocking data coming from numerous digital ecosystems, enabling more efficient collaboration among various organizations in the supply network. The new solution implemented on our products uses blockchain-based platform and multi-patented authentication technologies developed by Merck to anchor physical objects securely in the digital world. In combination with Industry 4.0 standards, this makes it highly trustworthy and reliable. As a science and technology company that operates across different business sectors, Merck also develops forward-looking digital solutions for customers that can be applied in a wide variety of industries.

Access relevant features via Smartphone App

The joint PoC comprises physical syringes with a secure unique ID, a smartphone application, and access to the digital platform of Merck in order to unlock the digital twin features. The smartphone app is accessible to authorized stakeholders such as brand owners (marketing authorization holders) and quality assurance officers of the manufacturer. After authenticating the syringe and reading the unique ID, the authorized user can access features such as quality data on demand, root-cause analysis data, and customer complaint handling:

- Quality data on demand: retrieving the machine-readable certificate of analysis as well as cosmetic and dimensional inspection data
- Customer complaint handling: streamlined complaint handling from brand owner to manufacturer and dashboard-like overview
- Root cause analysis: product-related data such as specifications and aggregation across different packaging levels in combination with quality-related data make it possible to examine errors and spot potential sources for mistakes at the container level.

Onboarding further parties

In this particular case, as in pharmaceutical supply chains where many specialists contribute to overall success, we intend to onboard further parties to build additional seamless multiparty solutions and exploit the full potential of traceability from production to the point of care. As soon as additional parties, such as contract manufacturing organizations, logistics providers and regulatory bodies, adopt the solution, the potential for automated business logic grows for use cases such as automated machine-to-machine generation of certificates and its exchange across different parties.

More information

... about our solution for traceable primary packaging can be found here: www.gerresheimer.com/en/innovation/track-and-trace-solution.

... about the digital solution by Merck to build digital trust in supply chains can be found here: www.merckgroup.com/en/research/research-and-development-highlights/blockchain.html.

New Clinical Trial Kit to accelerate drug development

Gerresheimer presents its new Clinical Trial Kit at Pharmapack in Paris. This kit consists of sterile Gx® RTF vials in nest & tub or tray with matching closures and is tailored to requirements to support the development of new drugs, vaccines and biologics in early phases. The Clinical Trial Kit is suitable for small batch manufacturing from first line trials to validation and clinical batches. It can be ordered in six different configurations of Gx® RTF Glass Vials. Kits including Gx® Elite and Gx® RTF COP vials will follow soon.

"There are currently more than 3,000 injectable drug programs in pre-clinical and clinical phases. With our clinical trial kits and supportive services, we want to proactively support our customers by providing them with first-class primary packaging solutions," said Jean-Edouard Rabier, Sales Development Manager and Director Project Management/Pharmaceutical Services and member of the Gx® Biological Solutions Team.

Simplifying the clinical development of drugs

Our Clinical Trial Kit simplifies the clinical development of drugs by offering pre-tested and validated solutions that are readily usable for small batch sizes to replace commercial production. The major advantage of this concept is that companies can benefit from the exact same performance of the containers during commercialization as during research and development. This helps to shorten time-to-market and bring life-saving drugs to patients faster.

Sterile Gx® RTF Vials and a selected range of stoppers and closure options

The kit provides a complete set of primary packaging container and containment solutions, especially selected for high-value drugs and/or most complex and demanding drugs. The Clinical Trial Kit complies with GMP requirements for the production of clinical batches. It is currently offered in six different configurations with nest and tub or tray for filling volumes 2R RTF, 6R RTF and 10R RTF. You may receive a tailored kit made from a range of stopper and closure options selected using expert advice. Each kit offers tried-and-tested product features, such as the integrity of the container system.

Additional integrated services

We accompany and support your drug development from basic analysis to fill & finish service, i.e., from the early phase through to life-cycle management. For this purpose, we have developed a network of partners to support you during the entire drug development journey. This includes expertise regarding regulatory implementation, development path and market approach, strategies for packaging and administration of drugs, as well as laboratory services. Analytical laboratory services include E&L studies (components and systems), material characterization according to ISO 10993-18:2020, biocompatibility studies according to the 10993 series, toxicological risk assessment and consulting services and BEP/BER writing services.

Formulation, fill & finish

Together with selected partners, we support you from the early pre-clinical phase to the start of clinical and commercial batch supplies. Regardless of whether you are CRO, CMO or CDMO, we know the right partners for a wide range of drugs including vaccines, mAbs, mRNA-based drugs and ATMPs.

A new DPI device for the generic drugs market

MERXIN and Gerresheimer worked successfully together to realize the shortest possible time-to-market for the MERXIN MRX003 Capsule DPI

Gerresheimer has assumed responsibility for the industrialization of a dry powder inhaler for the treatment of respiratory ailments for MERXIN (United Kingdom), a company that specializes in making inhaler devices. The inhaler is produced in Pfreimd (Germany) for worldwide distribution. Beyond the technically sophisticated industrialization of the product, the main challenge of the project was to coordinate an optimal development process aimed at ensuring the shortest possible time to market at the lowest cost.

MERXIN MRX003 capsule dry powder inhaler is used for pulmonary delivery and in particular for the treatment of chronic, obstructive pulmonary diseases (COPD) and asthma. The API is aerosolized and distributed with the respiratory system to find its way deep into the lungs of the patient. The correct interplay of inhaler and formulation plays a decisive role in the success of the treatment.

The first product target for MRX003 was a generic version of an API. Because of the nature of the generic market, it was of essential to achieve the shortest possible time to launch. This was achieved through a close cooperation between the partners. Decades of expertise and know-how in inhaler design and production were combined between MERXIN and us. Jochen Wegerer (Program Manager, Gerresheimer Regensburg GmbH, Wackersdorf) was impressed by the cooperation: “The good teamwork within the project is noteworthy. Challenges were always discussed in a goal-oriented, creative, and open manner, so that approaches to solutions could be formulated and implemented within the shortest time possible.”

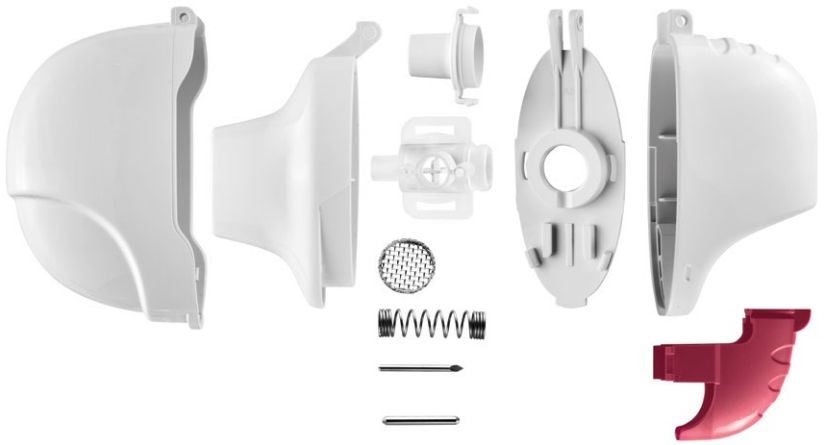

MRX003 is assembled from a total of 12 parts, meaning seven injection molding parts of ABS or MABS (base element, capsule housing, hinge plate, button, mouthpiece, filter housing, sealing cap) as well as five stainless steel bought-in components (two lancets, spring, cylinder pin, and fine filter unit). A pouch is used for the packaging of the finished product. For the BICs, we selected suppliers who are capable of fulfilling sophisticated quality. The injection molding parts are produced at our location in Pfreimd in multi-cavity tools. The fully automated assembly and gap-free testing of each individual inhaler takes place at three round table stations.

The design of the manufacturing process of MRX003, had to deliver high product quality with the most stable, fully automated processes possible and to enable affordable production for the generic drugs market. “With the help of our DMF package, we were able to create, implement, and qualify the molds to be very robust,” Richard Gradl (Mold Engineer, Gerresheimer Regensburg GmbH, Wackersdorf) explains. “The stable component quality and high process capability of the molds ensure good conditions in the series production environment.” Our risk management approach was based on procedures that were tailored to the special features of the project, from qualification and validation to long-term production security, as highlighted by Tobias Bernklau (Global Head of Quality Engineering, Gerresheimer Regensburg GmbH, Wackersdorf): “The focus is always on the user for all decisions. For critical areas and functions, we deliberately invest more effort than for less critical areas and functions.”

Electronically controlled medtech systems from a single source

Gerresheimer and Zollner enter into a strategic partnership

Gerresheimer AG and Zollner Elektronik AG are pooling their market-leading pharmaceutical and medical technology expertise under a strategic partnership. Starting immediately, we will offer pharmaceutical, healthcare and biotech companies our conceptual design, development and manufacturing capacities for drug delivery and medical technology systems, including complete electronics, from one single source. Gerresheimer serves as the central point of contact for customers. The market-leading partners combine the expertise of Gerresheimer in innovative devices for the administration of medicines and medical technology systems with the globally established electronics expertise of Zollner.

With this strategic partnership, Gerresheimer and Zollner are counting on the global trend toward electronic, digitally controllable and connected drug delivery and diagnostic systems. These include insulin pens, inhalators, like for people suffering with asthma, Point-of-Care systems and medicine pumps. The demand for medical and pharmaceutical devices with electronic components mostly for the treatment of chronic illnesses will significantly increase in coming years.

"The future belongs to digital treatment support with electronic systems and connected platforms," said Dietmar Siemssen, CEO of Gerresheimer AG. "The partnership with Zollner helps us to provide our pharma customers with innovative one-stop medtech solutions. For patients, using these solutions means better treatment and enhanced quality of life. At the same time, the healthcare system also benefits by way of permanently reduced treatment costs."

Gerresheimer and Zollner have collected much cooperation experience in numerous projects. The electronics specialist Zollner already supplies us with components and assemblies for medicine pumps in Parkinson's therapy.

Through the integration of concept design, development and manufacturing, the products of both sides can be brought to market faster and more efficiently. Also gained is permanent, secure access to electronic components. The cooperation initially covers the development of inhalers for chronic lung disease sufferers, autoinjectors, ophthalmology systems and drug pumps, as well as contract manufacturing for these and similar devices.

We already boast a portfolio of electronically controlled devices and solutions based on our own intellectual property, including the iQhaler (see picture above) and the Gx® SensAir pump. The strategic partnership with Zollner will contribute to the significant expansion of that portfolio.

This partnership also supports the sustainability strategies of both companies. For instance, we have agreed on a technology exchange enabling the development of even more efficient production processes – including with the use of artificial intelligence – to minimize waste and rejects.

> **"The future belongs to digital treatment support with electronic systems and connected platforms,"**
>
> **said Dietmar Siemssen CEO of Gerresheimer AG.**

Dietmar Siemssen, CEO of Gerresheimer AG (l.) and Markus Aschenbrenner, Member of the Managing Board, at the signing of the partner agreement.

Revolutionizing treatment of Parkinson's disease

Gerresheimer partners with MedTech start-up Adamant Health

Gerresheimer AG and the Finnish MedTech start-up Adamant Health Oy partner up to develop a life-changing solution for millions of people worldwide suffering from Parkinson's disease. The measuring technology and platform in development will address one of the biggest impediments in treating symptoms of Parkinson's: determining the optimal time to take symptom suppressing medication. In the future, Adamant Health's measurement and analysis technology and Gerresheimer's digital platform solution will help to determine the exact right moment for drug administration and inform patients as well as medical staff about the patient's treatment and symptom development. The advantage for patients: The symptoms become much more stable and predictable. This allows them to live their everyday lives in a more independent, safe and satisfying way.

"Our common goal is to optimize the treatment of Parkinson's and to improve the patient's quality of life dramatically," said Dietmar Siemssen, CEO Gerresheimer AG. "The investment is part of our strategic expansion into personalized drug delivery devices combined with platform-based and digital disease monitoring. It will also complement our high value solution offering for clients as defined in our strategy process formula G", he added.

Parkinson's disease is a progressive nervous system disorder and causes reoccurring tremors, stiffness and slowing of movement. While it currently is incurable, medication can significantly alleviate symptoms. The disease affects approximately 10 million patients worldwide.

"We are expecting the number of people with Parkinson's to more than double within the next 30 years," said Paulus Carpelan, CEO Adamant Health Oy. "Our measurement and analysis service with its unique technologies aim to help individualizing therapies and consequently to improve patients' quality of life significantly," he added.

Parkinson's disease ...

is caused by the death of certain nerve cells in the brain. This leads to a deficiency of the neurotransmitter dopamine. Among other things, dopamine plays a major role in controlling muscle function – and thus movement. The aim of drug treatment is to normalize the concentration of this neurotransmitter. To achieve this, the medication must be precisely set and adjusted at regular intervals. This is made possible by micropumps such as our D-Mine pump.

By partnering up, Gerresheimer and Adamant Health fill a gap in the therapy of Parkinson's patients. A combination of monitoring and personalized adjustment of medication is a novelty. In the field of monitoring of the neurodegenerative chronic disease, Adamant Health already holds a unique position: The current technologies used in monitoring disease progression only collect patient's physical movement data. The sensor used in Adamant Health's solution links this function with technology called surface electromyography (EMG), i.e., the local measurement of electrical neuromuscular activity.

Innovative Gx SensAir® platform for highly viscous biologics

With Gx SensAir®, Gerresheimer presents an innovative platform for on-body delivery of drugs with higher viscosity, such as monoclonal antibodies (mAb). The aim is to provide patients with the best possible support in the subcutaneous delivery of large-volume biologics. The easy-to-use Gx SensAir® On-Body Drug Delivery Device enables patients to start medication in a self-determined manner in familiar surroundings, for example at home. The Gx SensAir® On-Body Drug Delivery Device can be adapted to medications of different viscosities and with different requirements. This applies to the size of the medical device as well as to the needle used, variable cartridge sizes and possible connectivity, for example to the patient's smartphone. Together with our One-Stop-Shop quality promise, which includes a solution from the cartridge to the drug delivery device from a single source, Gx SensAir® enables optimized delivery of biologics.

Gx Inbeneo® – first own Gerresheimer autoinjector

Our new autoinjector Gx Inbeneo® offers new opportunities in the treatment of various diseases. It is suitable for subcutaneous injection with up to 3ml volume. The patient-friendly, robust cartridge-based autoinjector will serve as a flexible platform for a range of different products in a variety of therapeutic areas. These include highly viscous formulations of biological APIs like new biological entities and biosimilars.

With this autoinjector development – based on proprietary IP – we enhance our existing broad portfolio of medical devices such as various on-body injector solutions and wearable injector systems.

Gx InnoSafe® syringe with passive needle protection system

Nurses are among the occupational groups with the most frequent cuts and puncture wounds. This can lead to infection with dangerous pathogens such as hepatitis B and C viruses or HIV. The Gx InnoSafe® safety syringe is the first syringe with an integrated passive safety system. The function of this solution is to prevent accidental injury to an already used syringe by an unintentional needle stick, because the needle is fixed in a sleeve immediately after use. In addition to these unique safety features, a special feature of the Gx InnoSafe® syringe is that it can be processed on all existing filling lines without any additional preparation or assembly steps. Furthermore, it complies with all regulations without any additional investment.

Improved sterilization of Gx RTF® syringes

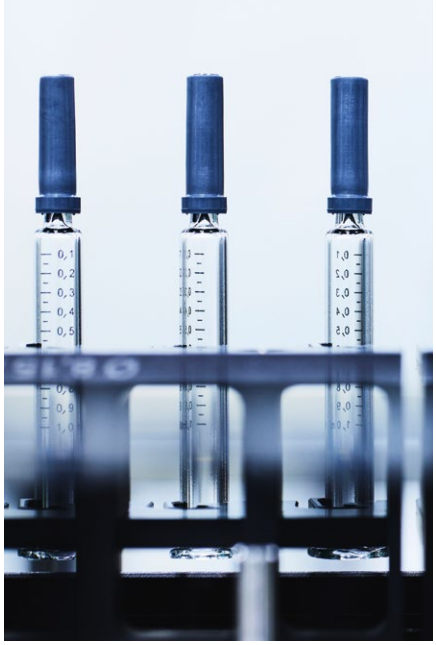

With our sterile Gx RTF® syringes, we are regarded as the technology leader with more than 20 years of production experience. We wash, siliconize, assemble with needle shield or tip cap and sterilize Gx RTF® syringes with ethylene oxide (EtO), which means that they are delivered completely prepared for aseptic filling. Together with our service provider, a global leader in outsourced sterilization services, we are working on an innovative solution that will reduce the use of ethylene oxide by around 45% and thus reduce fugitive emissions of ethylene oxide.

The benefits of reduced ethylene oxide use at a glance:

- Continued safe use of ethylene oxide as the most widely used sterilization method for primary glass packaging.
- Maintaining specified residual ethylene oxide while reducing fugitive emissions and excess residuals
- Reduction of required aeration times and thus resulting in improved customer supply chain efficiencies
- Reduction of the CO_2 footprint

DropControl – Gerresheimer's solution for new ophthalmic formulations

The new generation of eye drop solutions has modified properties compared to the former water-based eye-drop solutions to improve the pharmaceutical effectiveness. The function of the eye-dropper therefore required a modification to prevent uncontrolled dropping when the patient turns the eye-dropper to release the droplets. "With DropControl Gerresheimer offers a solution to enable the use of conventional eye dropper systems for the new eye drop solutions with very low viscosity", says Niels Düring, Global Executive Vice President at Gerresheimer Plastic Packaging.

With DropControl the patient can apply the eye-drops as usual. The outer shape is unchanged, we just developed an insert which prevents the uncontrolled release of droplets. It is suitable for all Gerresheimer's A, E and F dropper bottle systems in 5, 10, 15 and 30 ml.

Siliconization for moulded glass packaging

We have established a siliconization process of the inner glass surface for volumes from 5 to 500 ml for clear and amber containers of hydrolytic classes I, II and III. Siliconization creates a hydrophobic silicone film that improves residual emptying of the filled medicine. This enables almost one hundred percent utilisation of the filling volume and optimal dosing of the medication. The silicone coating also forms a protective barrier between the medicine and the glass surface, ensuring that the medicine is additionally protected over its life cycle. This will help you to maximize the value of your pharmaceutical product and keep your patients safe.

Below we present trade publications and white papers in which our experts comment on key topics and trends in the field of pharmaceutical packaging and drug delivery devices.

Whitepapers

Silicone-oil-free prefilled syringe systems

Pharm. Ind., No. 8 (2022), pp 1021-1029.
HomePage (ecv.de)

In this article, Bernd Zeiss, Head of Global Pharmaceutical Support, Gerresheimer Bünde, addresses the influence of silicone oil on the syringe system and highlights the advantages and possibilities of novel silicone-oil-free prefillable syringes, both or glass as well as for plastic syringes.

Using high quality glass vials to improve efficiency and reduce costs in pharmaceutical manufacturing

The Pharmaceutical Post, No. 11, July 2022, pp 46-55.
Elite vials - The Pharmaceutical Post

This Gerresheimer white paper briefly reviews some of the challenges for the pharmaceutical industry when working with glass vials and examines recent advances in glass vial production.

Trade publications

Silicone-oil-free, coating-free, tungsten-free prefillable syringes

ONdrugDelivery, Issue 138 (Oct 2022).
INJECTION - ONdrugDelivery

Bernd Zeiss, Head of Global Pharmaceutical Support at Gerresheimer Bünde and Taras Bredel, Business Development Director at Injecto, present the studies, development, performance and benefits of the Injecto lubrigone3 plunger stopper combined with the Gerresheimer RTF® glass syringe for sensitive drugs.

Injection Devices: Three Trends Influencing Development & Delivery

Drug Development & Delivery, Vol. 22, No. 6, September 2022, pp. 44-63.
SPECIAL FEATURE - Injection Devices

The global injectable drug delivery market is expected to grow phenomenally. This report showcases how Gerresheimer and other manufacturers are addressing these trends in their injection designs.

Getting proactive with Pharma Packaging

Pharmaceutical Technology, Vol. 46, Issue 7, July 2022, pp 16-19.
Getting Proactive (pharmtech.com)

Stefan Verheyden, Global VP of our Gx® Biological Solutions Team, elaborates on trends in the pharma packaging market: a developing preference for single-dose packaging formats, a rise in drug development in general, the growth of e-Commerce and sustainability efforts.

On-body delivery systems – News and Trends

ONdrugDelivery, Issue 137 (Sept 2022), pp 12-16.
Wearables-ONdD-Sep-2022)

This overview discusses the current state of play in the on-body delivery system space, reviews recent milestones and proposes directions for the future. Gerresheimer Olten (Sensile Medical) has three OBDSs in its offering which are described in this article.

Industrialisation of Pharmaceutical and Medical Devices in the Scientific Moulding Approach

ONdrugDelivery, Issue 136 (Aug 2022), pp 28–33.
Industrialisation – ONdrugDelivery

Thomas Rudolph, Markus Reil, Stefan Schumann and Tobias Weigert, Gerresheimer Medical Systems, discuss our strategy for managing potential risks across the entire product lifecycle.

Gerresheimer – Innovating for a better life

International Biopharmaceutical Industry, Vol. 5, Issue 2 (2022), pp 8-9.
Gerresheimer (international-biopharma)

In this interview, Stefan Verheyden, Global Vice-President Gx® Biological Solutions at Gerresheimer, gives an insight into the newly launched online service tool gGuide, which helps customers find the best product solution in Gerresheimer's portfolio.

CDP score: Gerresheimer upgraded to “A-”

for positive impact on Climate Change

Gerresheimer has received an “A-“ scoring by CDP (Carbon Disclosure Project), a global non-profit organization running the world's leading environmental disclosure platform. We have improved our score from “B” to “A-“ and thus achieved leadership status. “Sustainability is an important driver for innovation and growth at Gerresheimer. The “A-“ recognition confirms that we prioritize thinking and acting sustainably as one of the main pillars of our global strategy,” said Dietmar Siemssen, CEO of Gerresheimer AG. “We are proud that the continued progress we have made has been independently validated and that CDP has recognized Gerresheimer as a global leader making a positive impact on climate change.”

We have participated in CDP’s annual detailed and independent assessment of companies on climate change since 2011. “Gerresheimer has set itself the goal to reduce the environmental impact of its products and activities with our strong sustainability strategy and clear targets”, said Katja Schnitzler, Group Senior Director EHS, CSR, OPEX. “CDP allows us to create the necessary transparency and to share data on our environmental impacts, risks and opportunities in a standardized way and at the same time benchmark our efforts and progress.” The goals in detail are to halve CO_2 emissions, to switch a 100 percent to renewable electricity and to reduce 10 percent in water withdrawals in m^3 by 2030. Already by 2023, we will incorporate ecodesign principles in all new product developments and aim to reduce the feed of industrial waste from our own manufacturing to landfills up to zero percent while minimizing incineration rates.

The independent, external rating makes our sustainability performance transparent to all stakeholders. As a globally active production company, we bear great responsibility for customers, patients, employees, partners, suppliers, neighborhoods and the environment. We have set ourselves the goal of being a strong partner and solution provider that integrates sustainability into our core processes, decision-making and products. Beside the EcoVadis Gold Medal these ambitions are now documented once more by the CDP organization.

More about sustainability and corporate responsibility can be found at gerresheimer.com.

CDP is a global non-profit organization founded in 2000 that runs the world’s environmental disclosure system for companies, cities, states and regions. Nearly 20,000 organizations around the world disclosed data through CDP in 2022 and over 1,100 cities, states and regions. Only 238 companies worldwide made it on the Climate Change A list.

Events

Trade Fairs

Pharmapack Europe
February 1–2, 2023
Paris, France
Paris Expo, Porte de Versailles
Hall 7.2, booth B60/B64

MD&M West USA
February 7–9, 2023
Anaheim, CA, USA

DCAT Week
March 20–23, 2023
New York, NY, USA
The Fifty Sonesta
Suite #2202

Festival of Biologics
March 20–22, 2023
San Diego, CA, USA
Sheraton San Diego

PDA Annual Meeting
April 3–5, 2023
New Orleans, LA, USA
Booth 412

PDA Europe Parenteral Packaging
April 18–19, 2023
Venice, Italy

Imprint: © Design and editing
Gerresheimer Group
Communication & Marketing
Klaus-Bungert-Straße 4
40468 Düsseldorf, Germany

Dr. Cordula Niehuis
cordula.niehuis@gerresheimer.com

Marion Stolzenwald
marion.stolzenwald@gerresheimer.com

Ueli Utzinger
ueli.utzinger@gerresheimer.com

Melanie Eggerstedt
melanie.eggerstedt@gerresheimer.com

gerresheimer.com

Gx Inbeneo®

The power of simplicity

Pharmapack | February 1 – 2, 2023 | Paris, France | Hall 7.2, booth B60/B64

Distribution Partner
Midas® Pharma

Pre-pressurized, cartridge-based design
Dry needle during storage and accommodates baked-on silicone cartridges

Patient-friendly application
Visual indicator for continuous user feedback

Customizable platform
Wide ranges of viscosities and volumes

gerresheimer.com

gerresheimer
innovating for a better life